FoMRHI Comm. 2056 **Jan Bouterse**

Making woodwind instruments

6a- The lathe

There are people who are afraid of lathes: turning pieces of wood on such an engine is for them such unknown territory that they prefer other methods to make their instrument parts round. And that is, of course, possible. With sharp hand tools (even with a pocket knife - I prefer Swiss army knives of the brand Victorinox) you can cut any piece of wood into a profile which is perfectly round in cross section. For simple instruments without elaborate baroque profiles, for instance small fifes made of branches of elder wood (where the central bore is drilled through the heart of the branch), this way of working is a good exercise, you can do it on a quiet walk through the forests. And instruments such as a dulcian or bassoon must also be shaped using planes and chisels (and/or a lot of sand paper): most of their parts have no circular cross section and cannot - apart from some sections - be turned on a lathe.

The other way to avoid turning, is making square instruments. Herbert Paetzold in Germany was a pioneer in designing very fine bass (and longer) recorders. These instruments have the advantage that they can be played with quite simple wooden keys which can also easily be mounted on the flat surface of the wood. Some members of the Bouwerskontakt have recently made long square recorders; they discovered that it is very important - but also quite difficult to achieve - to get the connections between the parts of the instruments perfectly airtight. It is also important to use the best quality of laminated wood, without any gaps between the layers. My question: why do I not see square versions or other long woodwind instruments, such as dulcians of bassoons - apart from some experiments by Daniel Bangham which I saw last year on the Galpin Conference in Cambridge?

Here is a square soprano recorder, after a design by Alec Loretto. I cut the windway in a piece of wood which can easily be removed by loosening the screws (just as the block which is screwed on from the back side).

An electric drill as drive for your lathe

Another reason to avoid a lathe is that the machine takes some space in your house or shed. And apart from turning, drilling or polishing wood (or some other materials like ivory substitutes), you can't use a lathe for many other things. When in 1980 I had the plan to make a recorder, I didn't yet know whether that was the beginning of a serious hobby or even a profession, or only a shortlived experiment. I also had not much money to spend, so I bought a set of lathe accessories for my electric drill. This set was by AEG and I made some fine instruments on it before I bought a bigger and more versatile 'real' lathe.
More recently I bought a similar lathe set to use with a power drill by Wolfcraft (photo below), because I needed for my workshops an easy transportable lathe. Both lathe set-ups by AEG and Wolfcraft are now out of production (and I sold mine), but maybe you can find them second-hand. The advantage of this type of lathe equipment is that you can easily make the working distance as long as you want. Stability might then become a problem, but - for instance - turning a long thin-walled renaissance flute on a heavy professional lathe is also awkward.

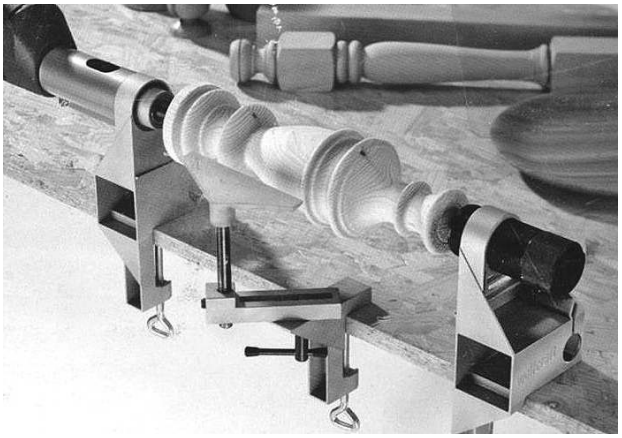

Another point to remember is that the bearings of electric drills are designed to be sturdy for drilling. But used on a lathe, the machine is exposed to forces perpendicular to the axis, which might cause problems. That's probably the reason that Wolfcraft designed on its lathe a connecting piece between the chuck of the drill and the spur centre. I must mention two further problems: an electric drill is noisy and you must not use it in the same horizontal position for a longer time. For safety reasons it is also better to make an extra on/off switch. within easy reach of hands, or feet.

Here is a TRT MC600 Drill powered woodturning lathe by Axminster, for about 60 English pounds (the power drill is not included in the set) a cheap alternative for the man who doesn't want to spend too much money on his hobby. It does not have, like the Wolfcraft, a connecting piece from the drill chuck and the spur centre (or - as on the photo - a face plate).

But is the Axminster set good, and pleasant to use, and is it worth the money? On the website of Axminster you can see some surprisingly negative reviews, and the more positive ones mention problems with for instance the tightening of the screws. I think that the Wolfcraft is (or was) better, for instance having a much more stable tailstock spindle. Maybe you can improve some parts of the Axminster set, but that is then the start of making a complete new lathe of your own design. I have known some people who did that, using a motor from a washing machine and some bike parts for the bearings. But for some parts of such a lathe you need another lathe to make them, which might be troublesome.

The pole lathe

There is another way to make a special type of lathe, the historical pole lathe. This has no motor, but instead you use one of your legs - it is also fitness training! I found this information on Wikipedia: *A pole lathe is a wood-turning lathe that uses a long pole as a return spring for a treadle. Pressing the treadle with your foot pulls on a cord that is wrapped around the piece of wood or billet being turned. The other end of the cord reaches up to the end of a long springy pole. As the action is reciprocating, the work rotates in one direction and then back the other way. Cutting is only carried out on the down stroke of the treadle, the spring of the pole only being sufficient to return the treadle to the raised position ready for the next down stroke.*

The Wikipedia author also says that a requirement is that the timber used on a pole lathe is freshly felled and unseasoned, i.e., green. I do not agree; most woodwind instruments from baroque and earlier periods were made of really hard and well seasoned woods, and on pole lathes. He is possibly correct with another statement: *The angle that the tools are ground is closer to that of a carpenter's chisel than that of a power lathe tool. Using power lathe tools on a pole lathe is safe, but hard work. Using a pole lathe chisel on a power lathe risks serious injury, since the forces are such that the blade is likely to break.*

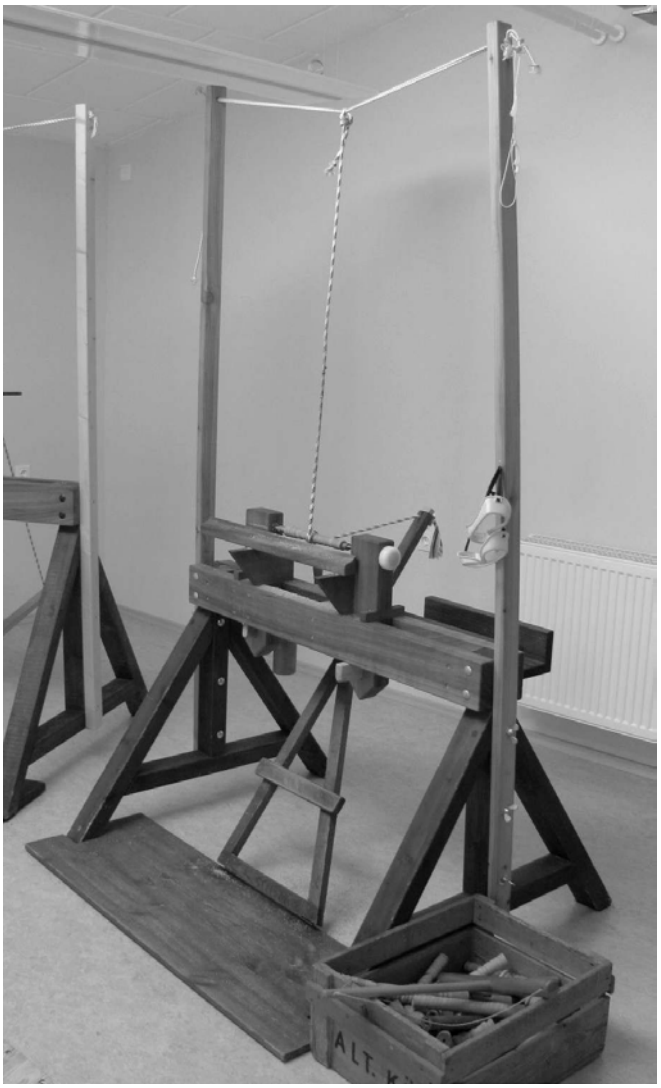

I have seen two beautiful pole lathes in the recorder factory of Mollenhauer in Fulda (Germany, see photo left). School classes can here learn how to turn wood in a safe way. The spring action comes cleverly from two vertical poles, attached to both sides of the lathe. The construction is clearly visible on the pictures, also the way that the wood is mounted between the centres of the lathe. It seems to me a perfect project for any school to make this type of pole lathe from scratch and then to use it for making finely turned products.

Pole lathes have some advantages over power lathes. One of them is the much lower speed of the turning. And that gives, together with the reciprocating action, the possibility of turning screw threads. There is a picture of a lathe of a maker of musical instruments in the famous *Encylopédie ou dictionnaire raisonné des sciences, des arts et des métiers* by Diderot and d'Alembert and published between 1751 and 1772, with later supplements. This picture (see below) needs some explanation: the rope is wrapped around an arbor and not around the workpiece (which hat to be mounted into a mandrel which is attached to the screw, G on the picture). The arbor has no fixed position, but can shift sideways over some distance. The arbor has at its left side a series of various types of threads, but putting a slide (in box B) into one of the threads, the desired shift will be realized and the thread will be reproduced by simply using the right tool (fig. 15 and 16 on the picture), pushing that against the turning and shifting wood.

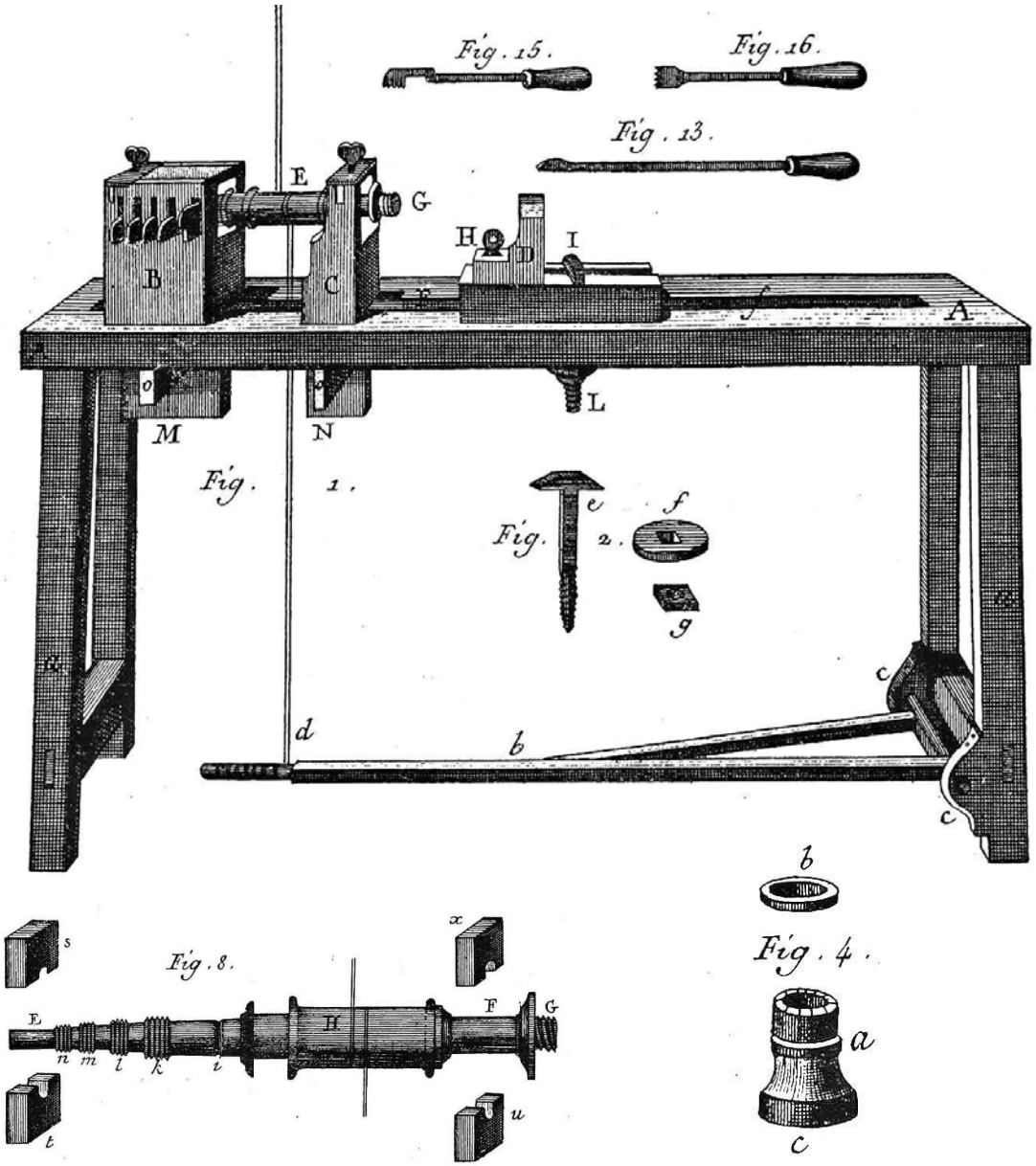

The movable arbor of the lathe (fig 8.) and the mandrel (fig. 4), for mounting round objects.

In Comm. 2053 I wrote about ornamental turning of ivory; more elaborate templates were used to get the desired ornaments. Cecil Adkins wrote about how ornamental lathes were brought to perfection by the development of the treadle lathe in the 17th century. This type of lathe has a continuous motion and when provided with a flywheel you can work more efficiently. On the site woodworkers-online.com/2011/02/easy-to-build-continuous-motion-treadle. html you can find inspiration and technical tips on how to make a treadle lathe yourself.

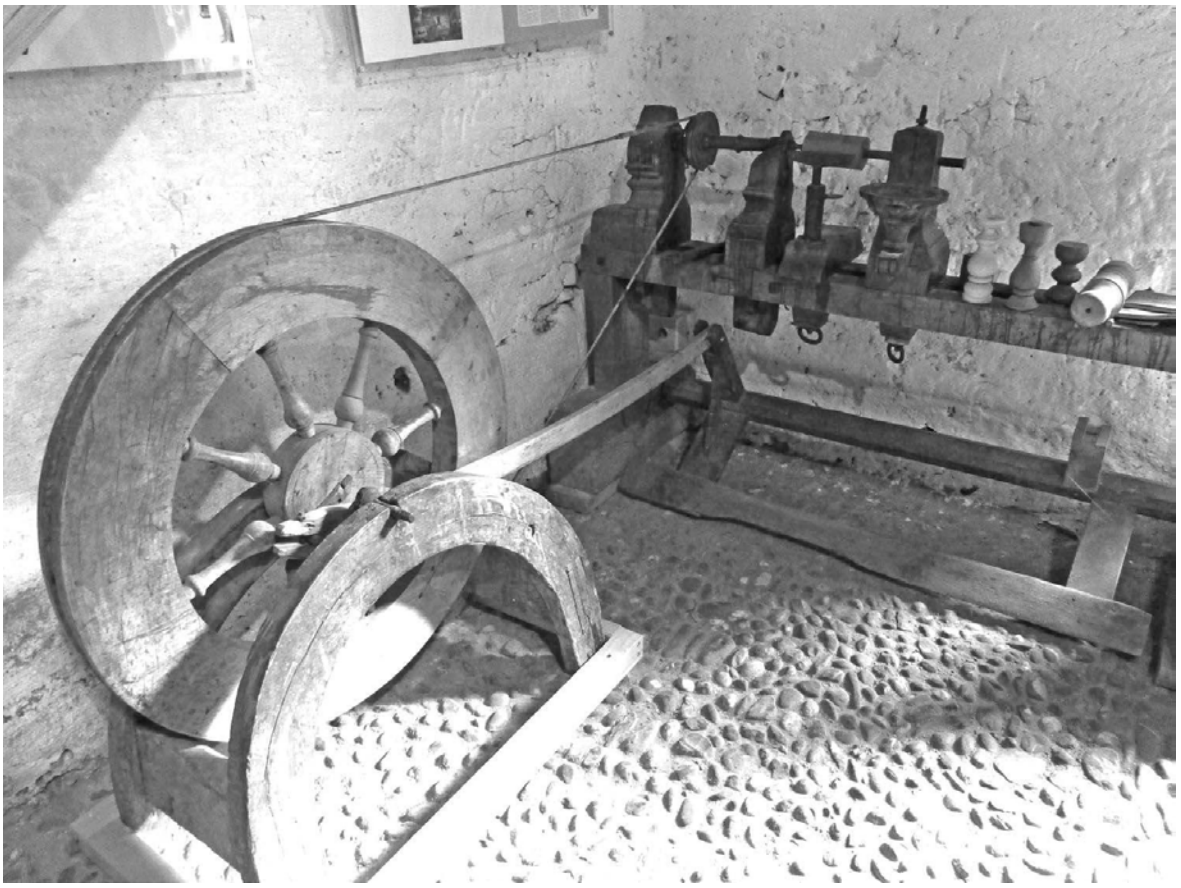

I have seen several old treadle lathes in local museums. On this photo (Erlenbach, Switzerland) is the flywheel placed at the left side of the lathe. It looks all rather primitive, but it is in working order an you can make the finest workpieces on it!

Modern wood lathes

The ideal wood lathe is versatile, stable, with sufficient length between the centres, easy to clean, safe to use and not too expensive. About the versatility: it is important that you can attach several accessories like a face plate or a sanding plate, a drill chuck or a universal self-centering chuck. And that means that I can't recommend most of the cheapest lathes My own lathe is by Ramatør, a (former) Danish product and a very robust machine, designed for use in schools. It has a three-phase motor (380 Volt), which gives very stable running, but it was rather expensive to install the necessary electricity supply in my house. The capacity of the motor is 3/4 HP (*c*.550 Watt), which is more than enough for all my work. Actually, I should rather prefer now a bit less power, because for some work on the lathe you need strong hands to handle the machine when something goes wrong with a drill, for instance with a drill that gets jammed in the wood.

Safety is of course very important:
I have on my lathe separate on and off switches. The off switch (see the arrow) can be operated with my hands but also - and that happened more than once - with my leg (or foot).
The motor also switches off when opening the caps at the left side, where you have access to change the position of the V-belt. For a restart you must close the doors and push the on-switch again, which is also for safety reasons.
My Ramatør lathe has four spindle revolutions (825, 1550, 2220, 2750 rpm), which is not too many, but I generally use only the 1550. The 825 is rather fast for the lowest speed. It is possible to make a provision to lower the speeds, but therefore you have must have rather much experience. And it is not possible to use a simple electric dimmer on lathe motors. Some modern wood lathes have a variable speed control, but these systems are prone to defects and wear (as we discovered on one of the lathes of the Bouwerskontakt).

A. Motor, Mounting Plate & Locking Handle
B. Outboard Bed Cover Plate Door
C. Headstock
D. Spindle Lock Knob / Index Pin
E. Outboard Hand Wheel
F. Headstock Cover
G. Spindle with Spur Center
H. Tool Rest & Base Assembly
I. Tool Rest Locking Handle
J. Tool Rest Base Locking Lever
K. Live Center
L. Tailstock Assembly
M. Face Plate
N. Electronic Controls
- ON/OFF Switch
- Forward / Reverse Switch
- Speed Control Knob
- Digital Speed Readout
O. Lathe Bed
P. Power Cord
Q. Tailstock Locking Lever
R. Tailstock Hand Wheel
S. Tailstock Locking Handle
T. Tool Holder & Tools

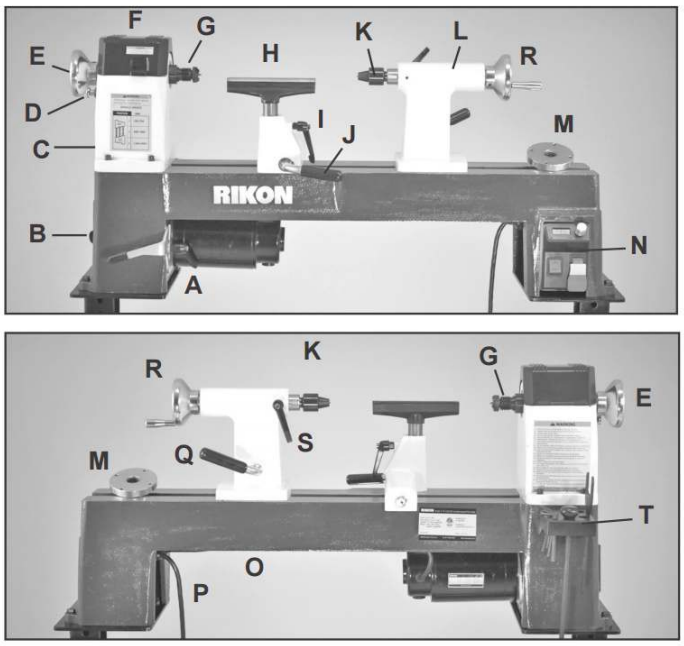

To the picture: a modern lathe by Rikon (USA) with its parts. It is possible to buy an extension to the lathe bed, and a longer tool rest is also available. A lathe by Woodfast (Australia) has almost the same characteristics and possibilities (turning speeds 360, 670, 1020, 1510, 2230 and 3250) is and is also sold by shops in Europe; the prices of these lathes are very reasonable.

My own lathe has - just as the Rikon and the Woodfast- two ways to attach accessories to the head spindle: an external screw thread and an internal morse taper (MT2). The drill chuck on the photo has such a morse taper; it is important to clean both surfaces (in the spindle and on the chuck) regularly to be sure that the tools stay perfectly centred.

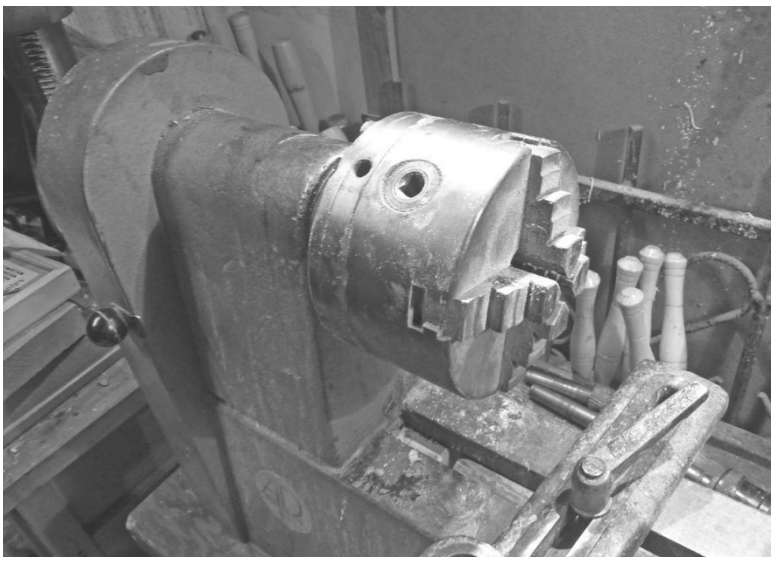

My self-centering chuck (with four jaws) uses the screw for attachment. But I don't like to work with it, because this chuck is so heavy. I got it from the retailer because an earlier and much lighter chuck, which came with the lathe, had problems with the centring.
I have also small metal lathe which has a chuck with three jaws, perfect to do very precise drilling and turning, for instance of rings of artificial ivory.

The traditional way to mount a piece of wood on the lathe is with spur centre (photo left). But that is not ideal for hollow pieces such as the parts of woodwind instruments. That's why I generally use a so-called enlarging mill or fraise (German: Lochfräser, photo right). It gives a perfect centring of the working piece and that is very important. The working order with wind instrument parts is that you begin with shaping the interior (drilling and

reaming a bore profile) in a piece of wood, to be followed by exterior (turning). The axis of the bore is the all important central starting point for all following actions. You have to be cautious hammering thin-walled pieces of wood against the fraise, and of course there will inevitably always be some traces of the sharp edges of the fraise in the end of the wood. But that is no problem, as we generally work with some excess length in the workpiece. And it is also a safe way of working: if for some reason the wood becomes locked, the fraise starts 'fraising', losing some millimeters of the excess doesn't bother us very much.

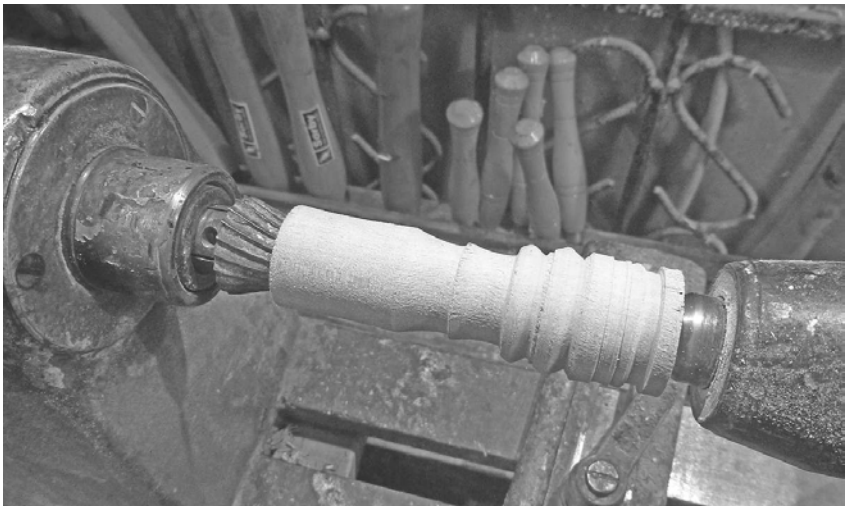

Piece of wood mounted in the lathe, using the 'Lochfräser'

It is, of course, also possible to mount hollow pieces with a spur centre. But then you have to put always a connecting piece (a plug or 'reel') which fits at one end on the spur, and at the other end fits perfectly in the bore of the instrument part (see diagram below). Perfectly means clasping so that there is just enough friction for the reel to stick to the wood.

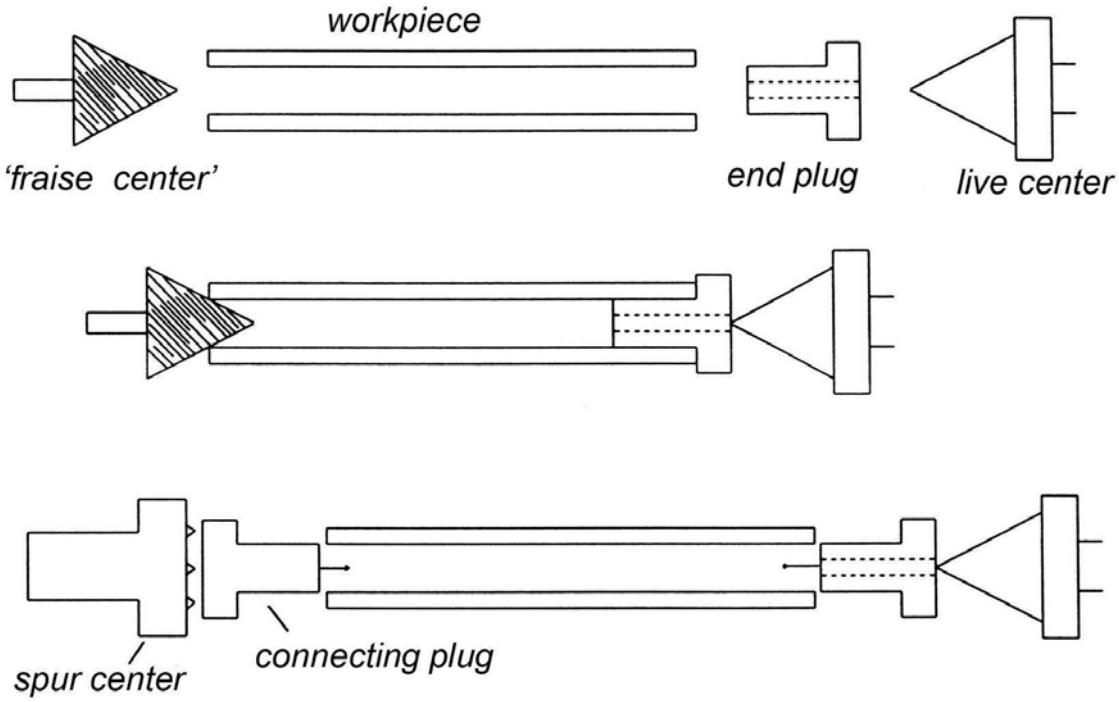

Here is a connecting plug to put in the bore of a workpiece, for mounting into a spur centre. There is an obvious problem: the traces of the spur on the face of the plug (photo right) are here wearing out the wood and that destroys an exact centring.

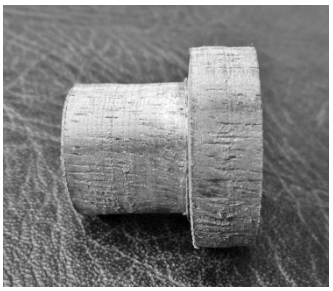

Other accessories for wood lathes: the lunette

Drilling long and thin pieces of wood (for instance one-piece renaissance traversos) gives the problem that the workpiece may easily start to vibrate, even when you use the sharpest chisels with the most subtle approach to the wood. The traditional solution is using a so-called lunette, which gives support halfway to the workpiece (which must be already turned round). It is a common device on metal lathes and it comes in two types: one that supports the workpiece on three sides, and the other one which support only at the back of the wood.

Long ago I made a device of which this is a schematic diagram, a cross-section of the lathe. At e- is the bed of the lathe, a- the tool rest, b- the workpiece, c- is the actual lunette with two small wheels. I could push the bar (d-) with my foot to give the right amount of pressure. Did it work? Well, more or less. One of the problems is that you have to move the system to the point where you are working with the chisel. And the wheels may leave some marks on the workpiece. I have used it only a few times and have it not anymore. Sometimes the idea is more interesting than the result. But maybe that other people can make a better version of it.

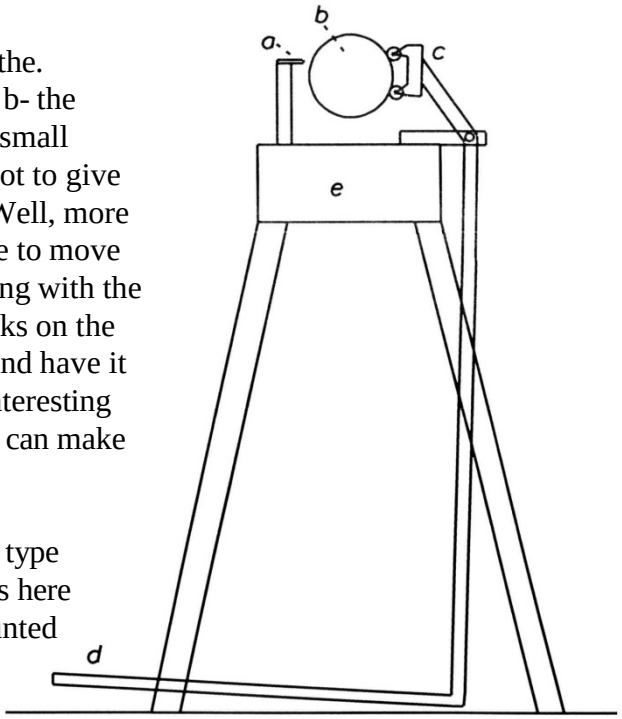

The photo on the next page shows the other type of lunette on a wood lathe. The workpiece is here a massive round-turned piece of wood, mounted in a special chuck at the side of the head spindle; the three wheels of the lunette are carefully adjusted to support the rod at the other side. A drill chuck is placed in the tailstock spindle; the drill is pushed into the turning wood. This is the traditional way to drill a pilot hole in the wood. Starting with a short drill, and when the hole has some length you must take a longer drill. There is no guarantee (even with the finest drills) that the hole will come out perfectly in the centre of the rod, a deviation of some millimetres is common. That is also the reason that you never must drill the wood from both ends, halfway reversing the wood: the two holes will never be perfectly centred or they will even not meet. That is bad: what we want is a perfect (and single) straight hole over the whole length of the workpiece.

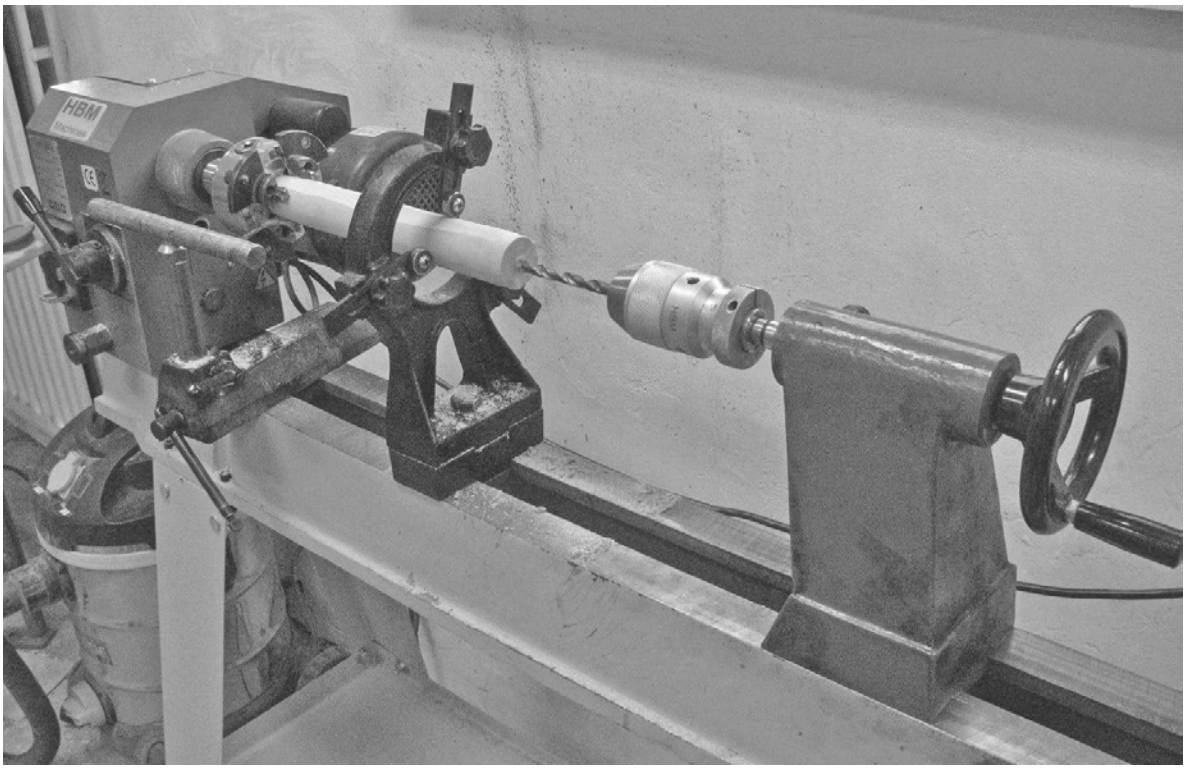

On the photo is a modern metal drill mounted in the chuck. The traditional way of making long holes on a lathe is with shell augers, said to be better self-centring. The Dutch name for these tools is ‘lepelboren’, translated: ‘spoon drills’, because they have the shape of a spoon. Such drills are depicted in old books, such as - again - the *Encyclopédie* by Diderot (fig. 4 and 5 in the picture below).

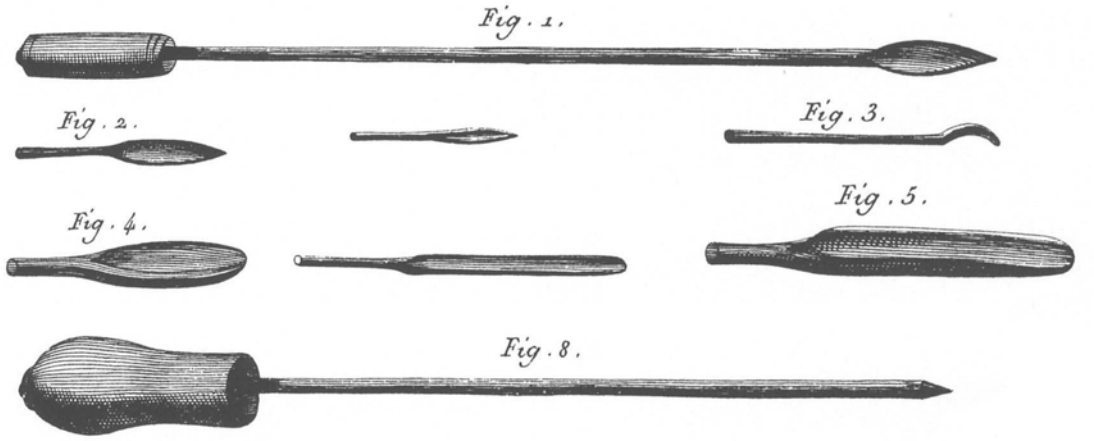

In the old days you asked your local blacksmith to make this type of drills for you, I have seen fine examples (up to 5 metres long) in museums. Ridgway Tools from Sheffield sold a modern version of the shell auger (see photo below), but this company doesn’t exist any-more, just like the old local blacksmiths. More about drilling long holes appears in a following article.

One of the problems you have to solve is that the workpiece, which has to be turned perfectly round, must be mounted at the left side firmly in the chuck. The jaws of the chuck will inevitably leave some dents in the wood. What you don't want, if you work with a lunette, is that the workpiece begins to move (in the direction of the tailstock): that is especially annoying when you use the lunette for reaming out the bore of an oboe bell.

Photo left: the bell of an oboe by Robbert Wijne (Nijmegen, 1698-1774). Clearly visible are the ripple marks in the bore. They are caused by the movement of the workpiece in the lunette, and also by instability: the long distance for the chisel between tool rest and where it touches the wood.

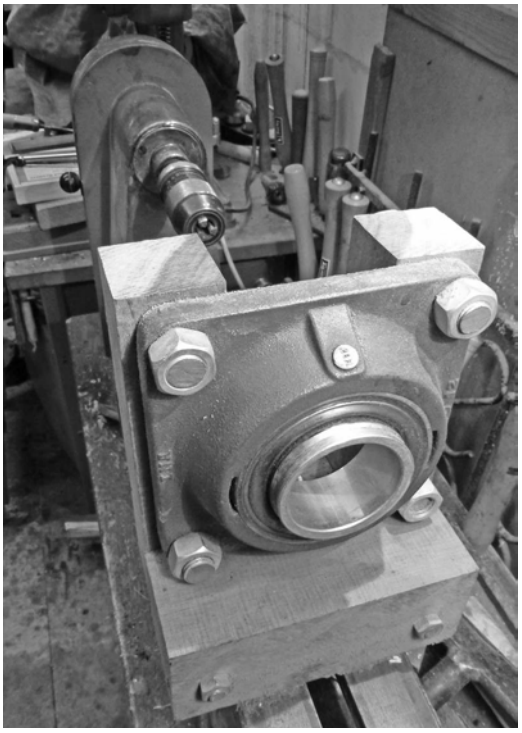

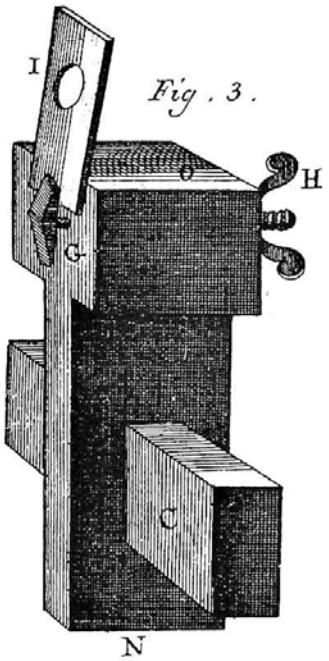

Back to Diderot: a much simpler lunette is depicted in his *Enyclopédie*: it is just a hole in a piece of metal (picture left). That is of course possible because of the much lower speed of that lathe. I have made a similar device for my Ramatør lathe, but put a (ball) bearing in it (photo right). It is a bearing used in agricultural machines, and actually I don't know which turning speeds are allowed. There is a nipple at the top where you can put grease into the system. And I had to make the construction quite heavy, this because of the forces on my lathe I made also set of wooden rings for mounting workpieces with different diameters into the opening of the bearing (which is 60 mm). And... I hardly used my construction: it is rather noisy and my metal lathe has a lunette which is just big enough for mounting a piece of wood for turning the bells of most types of baroque oboes.

The metal lathe

In this contribution about lathes I have to make some remarks about the metal lathe. It is just with this lathe as with a watch or a pocket knife: you are not missing them when you never had them before. But a metal lathe is a great help for making tools such as reamers, and you can turn also wood and other materials on it.

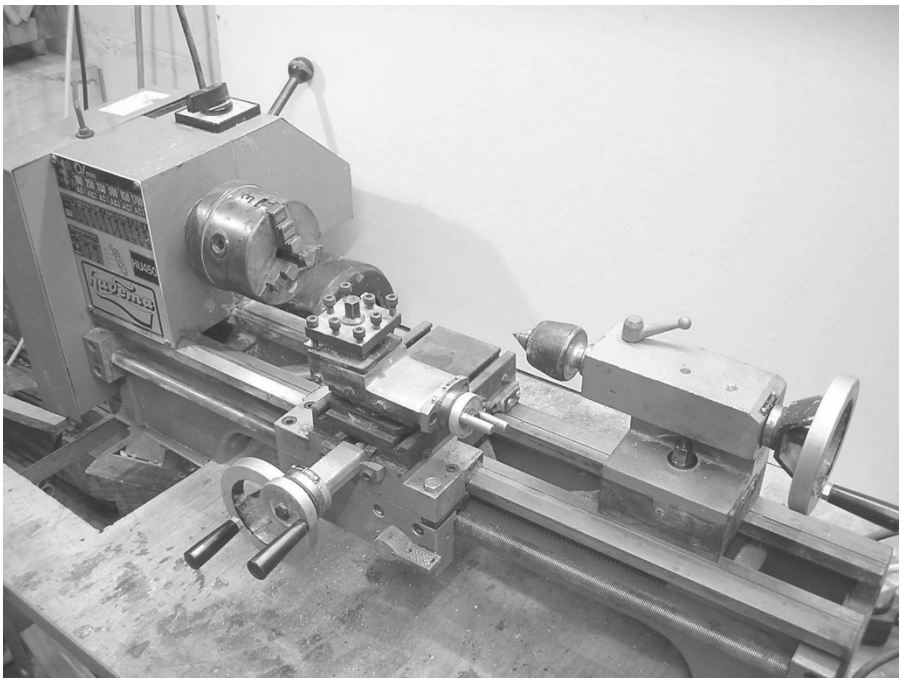

My metal lathe was made in Taiwan, more or less as a copy of a much more expensive lathe by Emco (Austria). It has a working length of 450 mm between the centres, but that is theoretical, especially for turning parts of wind instruments. I think that the effective working length for such work is between 350 and 400 mm. The advantage of this lathe (and most metal lathes) is that is has much slower speeds than my wood lathe: from 100, 250, 350, 500, 850 and 1700 rpm, and you can also reverse the rotation. The low speeds make the lathe more suitable for drilling and reaming instrument parts. Accurate turning and drilling is possible by using the scales on the hand wheels. For free turning - as on a wood lathe - you must make a rest (you can't buy them to the metal lathes).

I use my metal lathe apart from turning (and reaming) rings of artificial ivory mainly for slow speed reaming of wooden instrument parts (the reamer mounted in the chuck). But I do also some metal work: brass rings which must get an exact length, some parts of measuring tools and so on. I have also turned steel rods for making gun drills to a specific diameter. Actually, I use this lathe quite regularly. A problem is cleaning: dust of wood and synthetic materials easily clog the threads of the wheels and other parts. That's why I do not recommand a metal lathe if you have the plan to do a lot of wood turning.

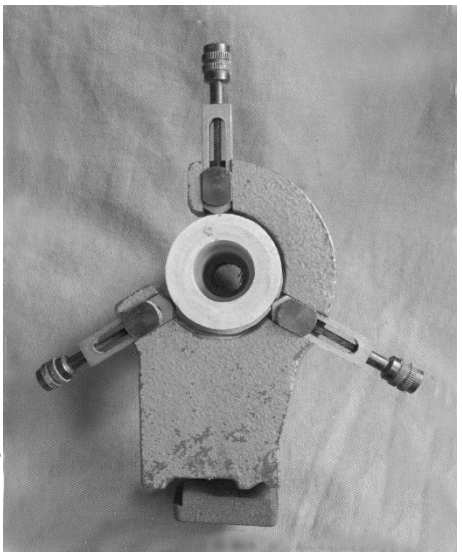

There is much more to say about working on a metal lathe, but there is nowadays so much information on the internet. I had to learn many things by trial and error. That is sometimes not so pleasant, but is good for your brains to solve the problems without help from others. To the photo: the lunette of my metal lathe has no wheel, but brass ends with sliding faces. That is not ideal for wood, but it is just workable.